Stepper Motors

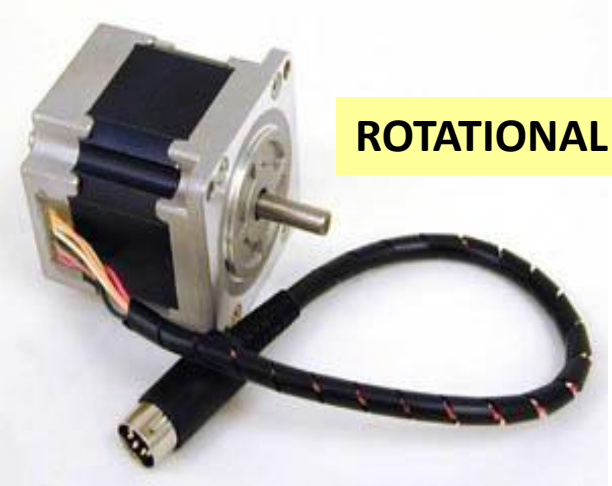

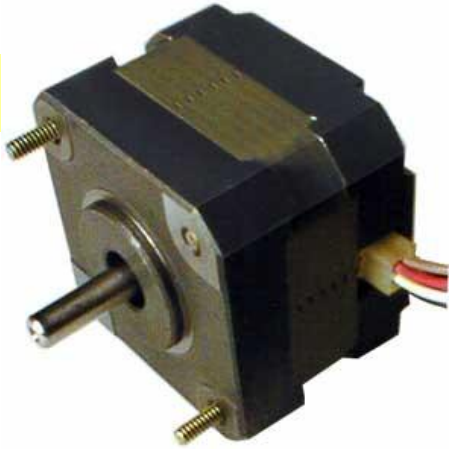

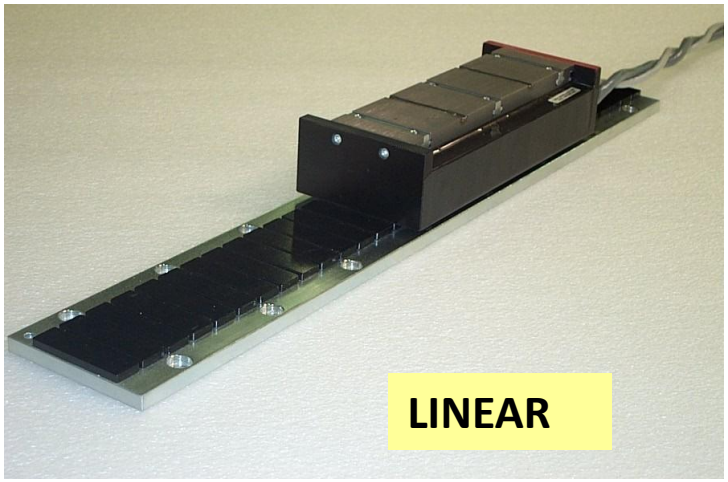

Fundamentals of operation

Stepper motors have multiple "toothed" electromagnets arranged around a central gear-shaped piece of iron.

The electromagnets are energized by an external control circuit, such as a microcontroller through power converters.

Fundamentals of operation

To make the motor shaft turn, first one electromagnet is given power, which makes the gear's teeth magnetically attracted to the electromagnet's teeth. When the gear's teeth are thus aligned to the first electromagnet, they are slightly offset from the next electromagnet.

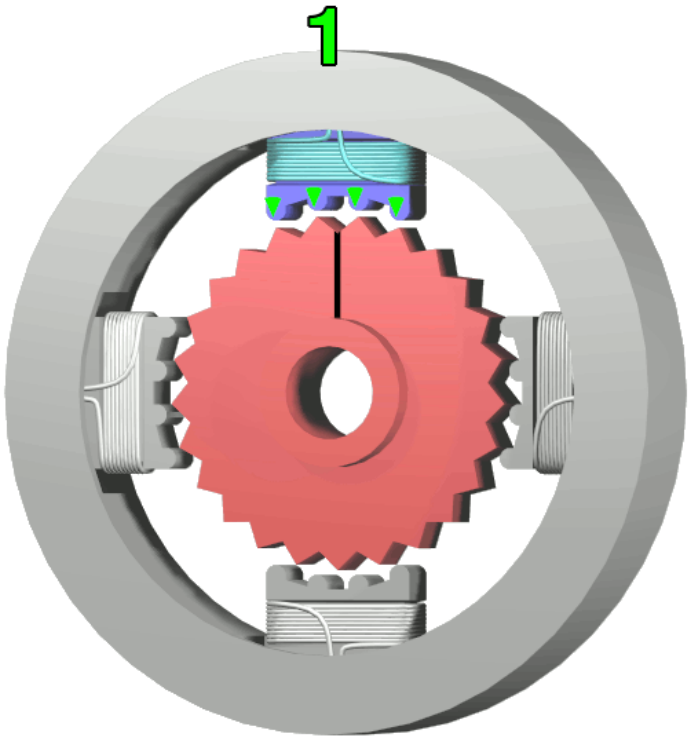

Fundamentals of operation

So when the next electromagnet is turned on and the first is turned off, the gear rotates slightly to align with the next one, and from there the process is repeated. Each of those slight rotations is called a "step", with an integer number of steps making a full rotation. In that way, the motor can be turned by a precise angle.

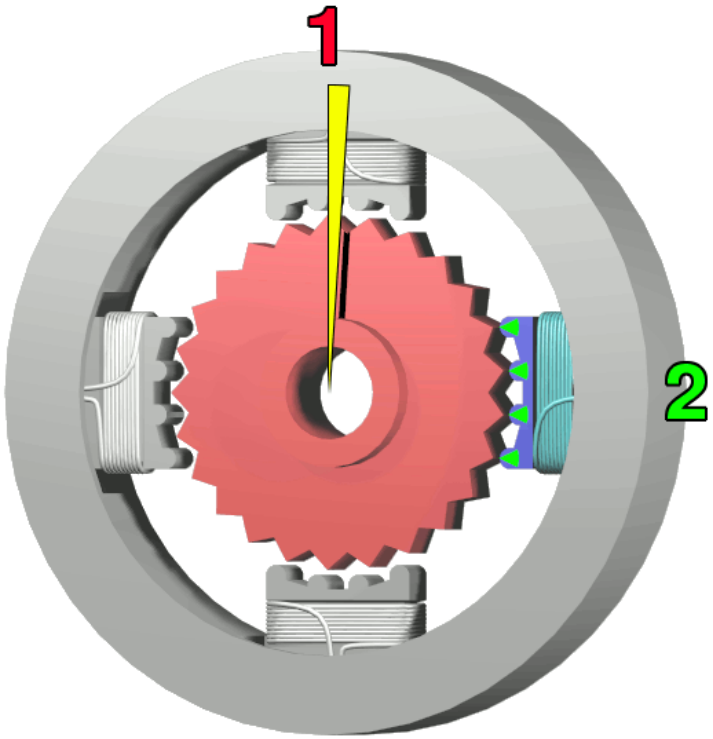

Fundamentals of operation

So when the next electromagnet is turned on and the first is turned off, the gear rotates slightly to align with the next one, and from there the process is repeated. Each of those slight rotations is called a "step", with an integer number of steps making a full rotation. In that way, the motor can be turned by a precise angle.

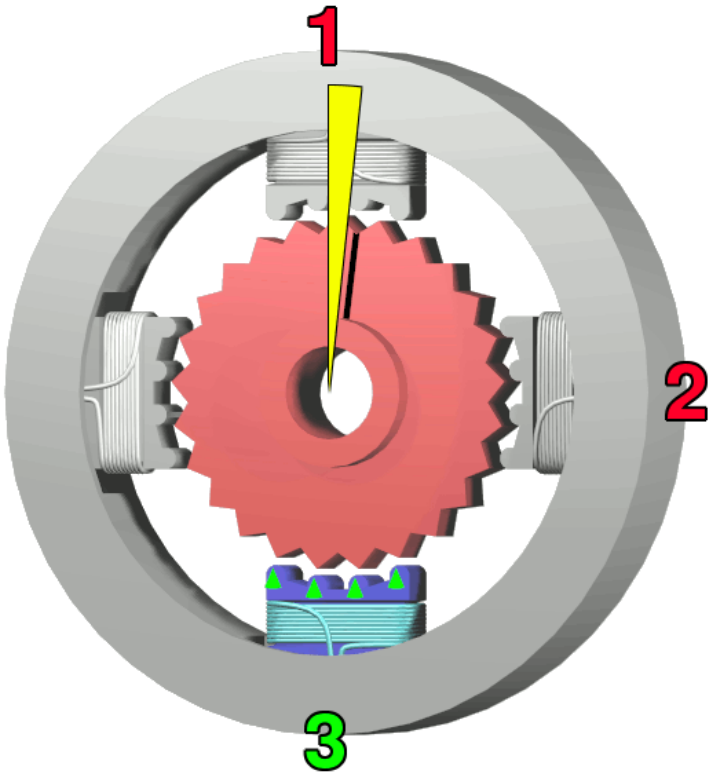

Fundamentals of operation

So when the next electromagnet is turned on and the first is turned off, the gear rotates slightly to align with the next one, and from there the process is repeated. Each of those slight rotations is called a "step", with an integer number of steps making a full rotation. In that way, the motor can be turned by a precise angle.

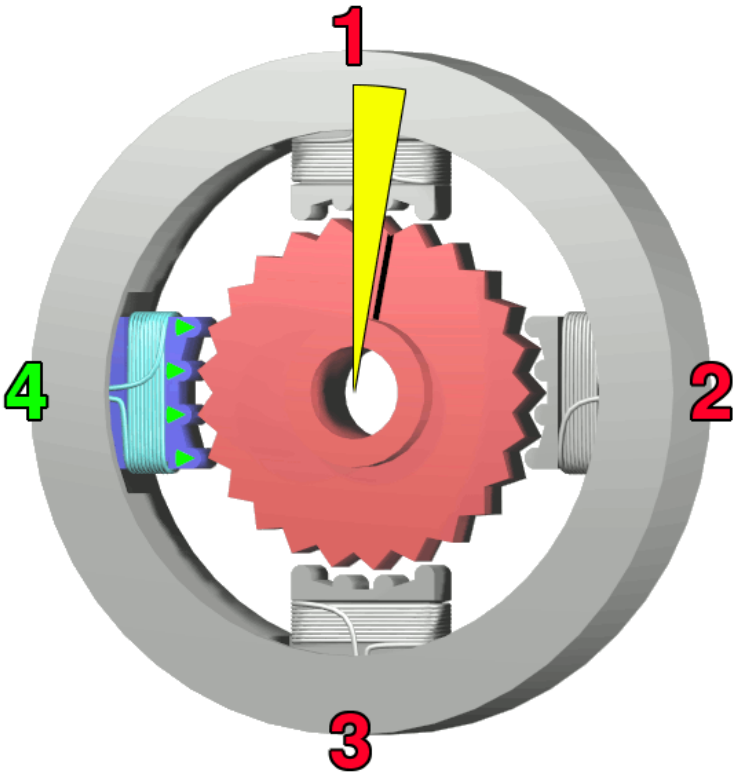

Features

Stepper motors provide a means for precise positioning and speed control without the use of feedback sensors.

The basic operation of a stepper motor allows the shaft to move a precise number of degrees each time a pulse of electricity is sent to the motor (Since the shaft of the motor moves only the number of degrees that it was designed for when each pulse is delivered). So, by appropriately applying the pulses to the motor, the speed and position can be controlled.

The rotor of the motor produces torque from the interaction between the magnetic field in the stator and rotor. The strength of the magnetic fields is proportional to the amount of current sent to the stator and the number of turns in the windings.

Types of stepper motors

1) Permanent magnet motor
2) Variable reluctance motor; and
3) Hybrid motor; which is a combination of the previous two

Permanent magnet motors use a permanent magnet (PM) in the rotor and operate on the attraction or repulsion between the rotor PM and the stator electromagnets.

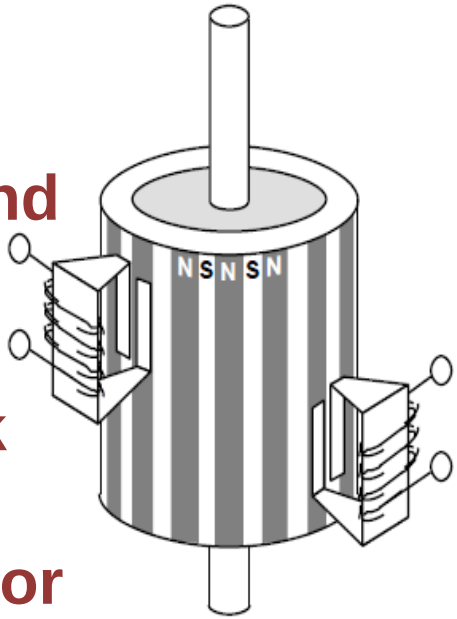

The rotor for the PM motor is called a canstack rotor as shown in Figure. The canstack rotor shows that the PM motor can have multiple rotor windings (i.e., the rotor is magnetized with alternating north and south poles situated in a straight line parallel to the rotor shaft). So, the shaft for this type will turn fewer degrees as each pulse of current is received at the stator.

PM stepper motors

For example, if the rotor has 50 teeth and the stator has 8 poles with 5 teeth each (total of 40 teeth), the stepper motor is able to move 200 distinct steps to make one complete revolution. This means that shaft of the motor will turn 1.8° per step.

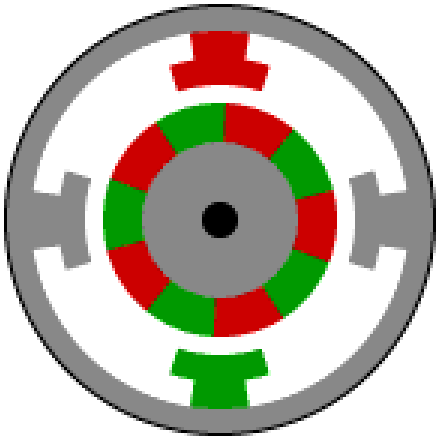

The main feature of the permanent magnet motor is that a permanent magnet is used for the rotor, which means that no brushes are required. The drawback of this type of motor is that it has relatively low torque and must be used for low speed applications.

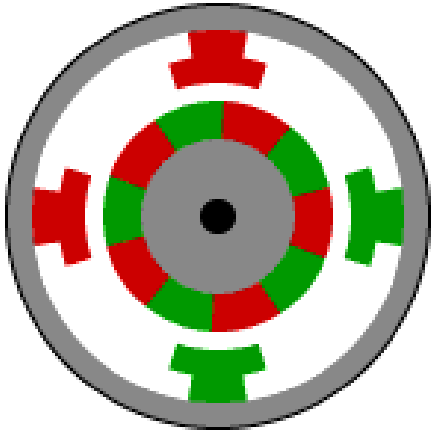

Variable reluctance stepper motors

Variable reluctance (VR) motors have a plain iron rotor (soft iron multi-toothed rotor and a wound stator) and operate based on the principle that minimum reluctance occurs with minimum gap, hence the rotor points are attracted toward the stator magnet poles. i.e., When the stator windings are energized with DC current the poles become magnetized. Rotation occurs when the rotor teeth are attracted to the energized stator poles.

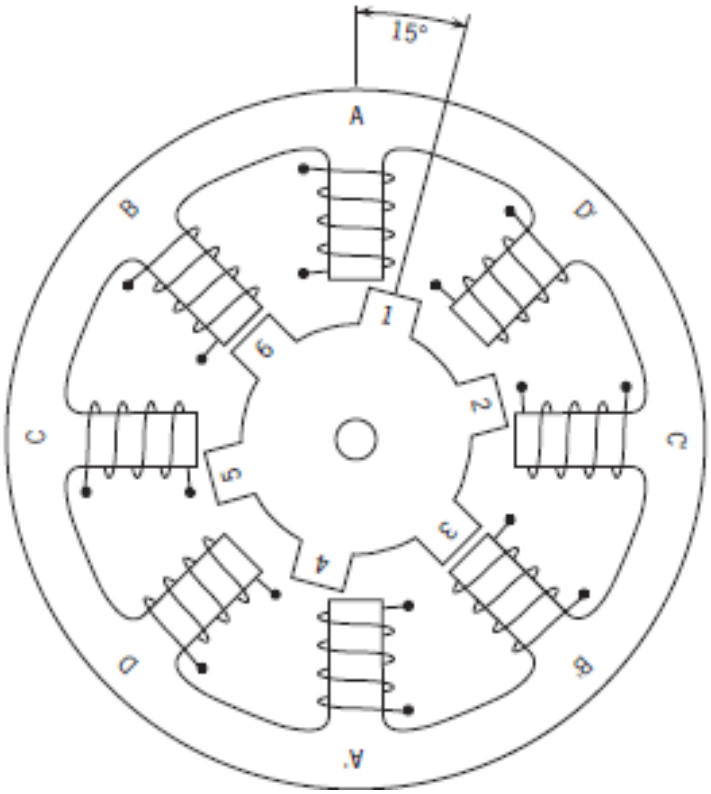

Hybrid stepper motors

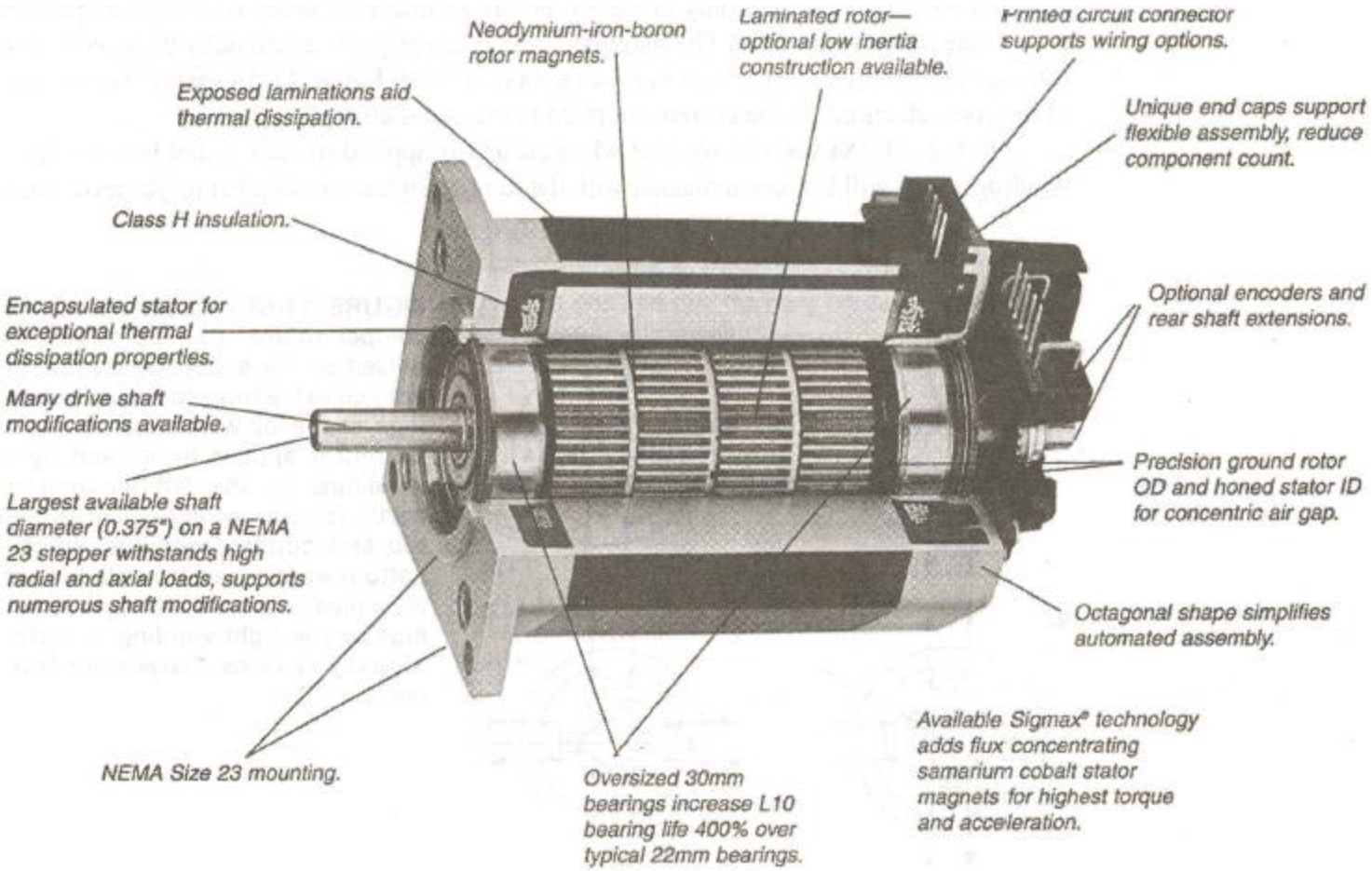

Hybrid stepper motors

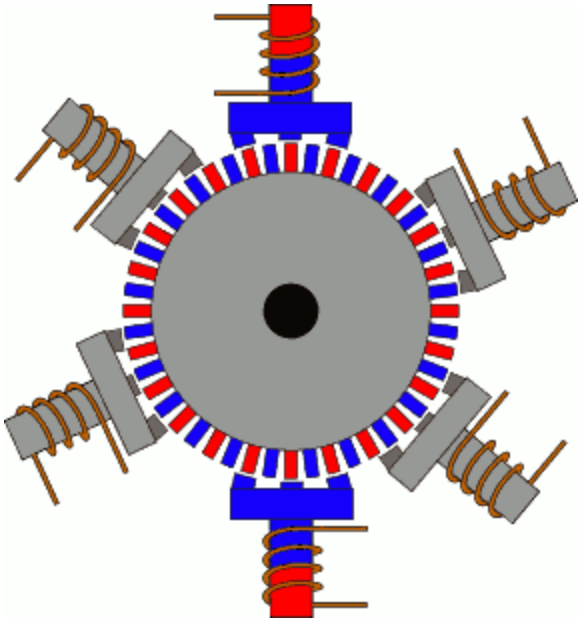

When no power is applied to the motor, the residual magnetism in the rotor magnets will cause the rotor to detent or align one set of its magnetic poles with the magnetic poles of one of the stator magnets.

When the rotor is in a detent position, it will have enough magnetic force to keep the shaft from moving to the next position. This is what makes the rotor feel like it is clicking from one position to the next as you rotate the rotor by hand with no power applied.

Two phase stepper motors

There are two basic winding arrangements for the electromagnetic coils in a two phase stepper motor: bipolar and unipolar.

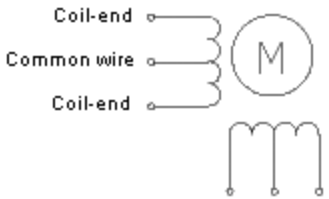

Unipolar motors

A unipolar stepper motor has two windings per phase, one for each direction of magnetic field. Since in this arrangement a magnetic pole can be reversed without switching the direction of current, the commutation circuit can be made very simple (eg. a single transistor) for each winding. Typically, given a phase, one end of each winding is made common: giving three leads per phase and six leads for a typical two phase motor. Often, these two phase commons are internally joined, so the motor has only five leads.

Two phase stepper motors

Bipolar motors

Bipolar motors have a single winding per phase. The current in a winding needs to be reversed in order to reverse a magnetic pole, so the driving circuit must be more complicated, typically with an H-bridge arrangement (however there are several off the shelf driver chips available to make this a simple affair). There are two leads per phase, none are common

Switching Sequence for Full and Half-Step Motors

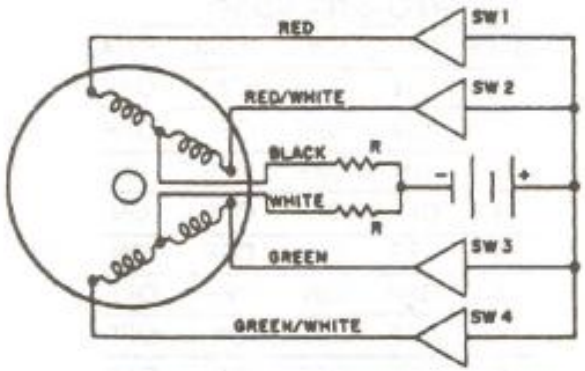

(a)

FOUR STEP INPUT SEQUENCE (FULL-STEP MODE)*

STEP	SW1	SW2	SW3	SW4
1	ON	OFF	ON	OFF
2	ON	OFF	OFF	ON
3	OFF	ON	OFF	ON
4	OFF	ON	ON	OFF
1	ON	OFF	ON	OFF

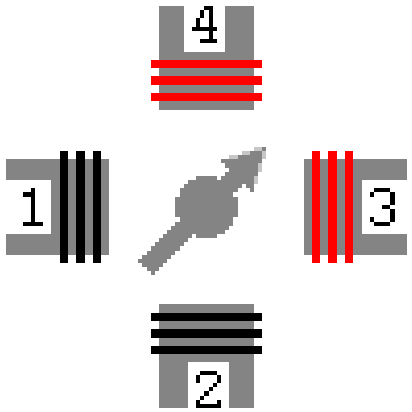

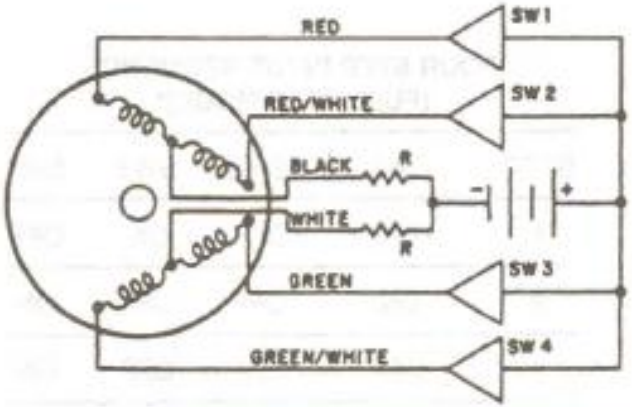

(a)

EIGHT STEP INPUT SEQUENCE HALF-STEP MODE*

STEP	SW1	SW2	SW3	SW4
1	ON	OFF	ON	OFF
2	ON	OFF	OFF	OFF
3	ON	OFF	OFF	ON
4	OFF	OFF	OFF	ON
5	OFF	ON	OFF	ON
6	OFF	ON	OFF	OFF
7	OFF	ON	ON	OFF
8	OFF	OFF	ON	OFF
1	ON	OFF	ON	OFF

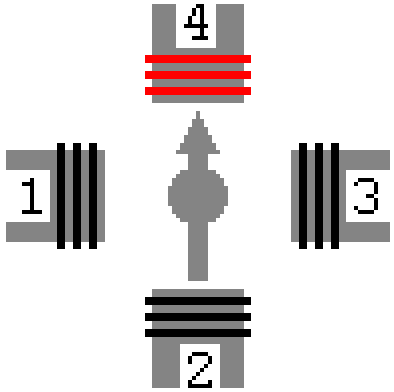

http://en.nanotec.com/steppermotor_animation.html

Micro stepping

The full-step and half-step motors tend to be slightly jerky in their operation as the motor moves from step to step. The amount of resolution is also limited by the number of physical poles that the rotor can have. The amount of resolution (number of steps) can be increased by manipulating the current that the controller sends to the motor during each step. The current can be adjusted so that it looks similar to a sine wave.

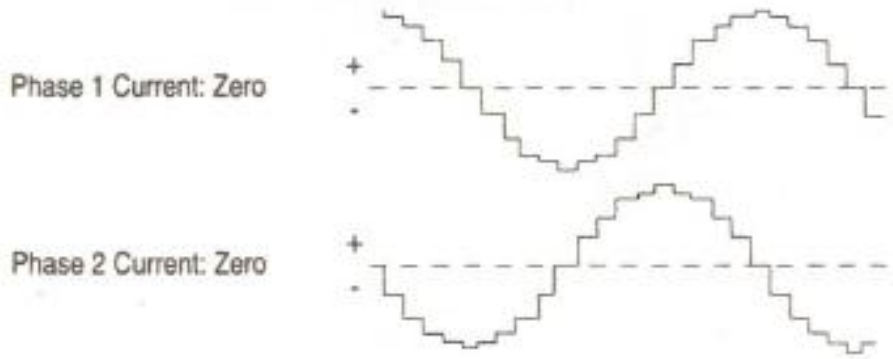

http://en.nanotec.com/steppermotor_animation.html

Micro stepping

From the current diagram, it can be observed that the current sent to each of the two sets of windings is timed so that it is always out of phase with each other. The fact that the current to each individual phase increases and decreases like a sine wave and that is always out of time with the other phase will allow the rotor to reach hundreds of intermediate steps. In fact it is possible for the controller to reach as many as 500 micro-steps for a full-step sequence, which will provide 100,000 steps for each revolution.

The voltage sent to the motor is now a sine wave. The motor for this type of application is generally a permanent magnet brushless DC motor. When the sine wave is sent to the motor at 60 Hz, it will cause the motor shaft to rotate at 72 rpm. The motor windings will require a capacitor to be wired in series for this type of application.

http://en.nanotec.com/steppermotor_animation.html

Stepper motor amplifier circuits

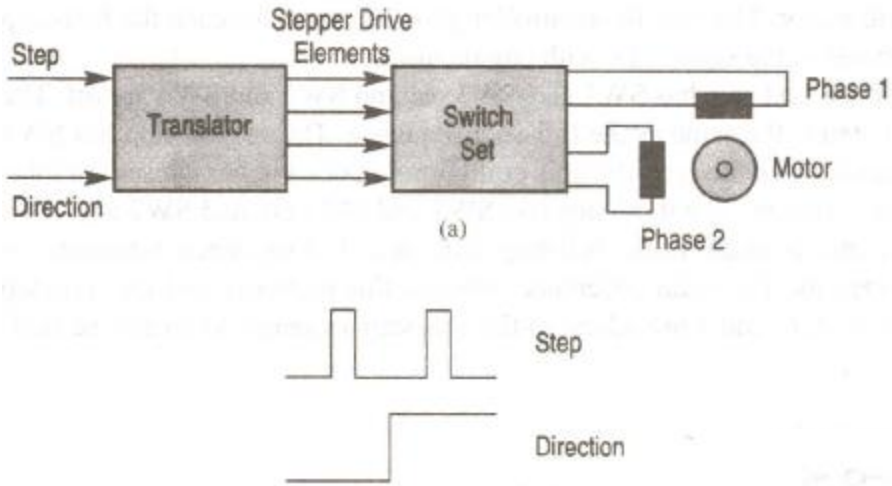

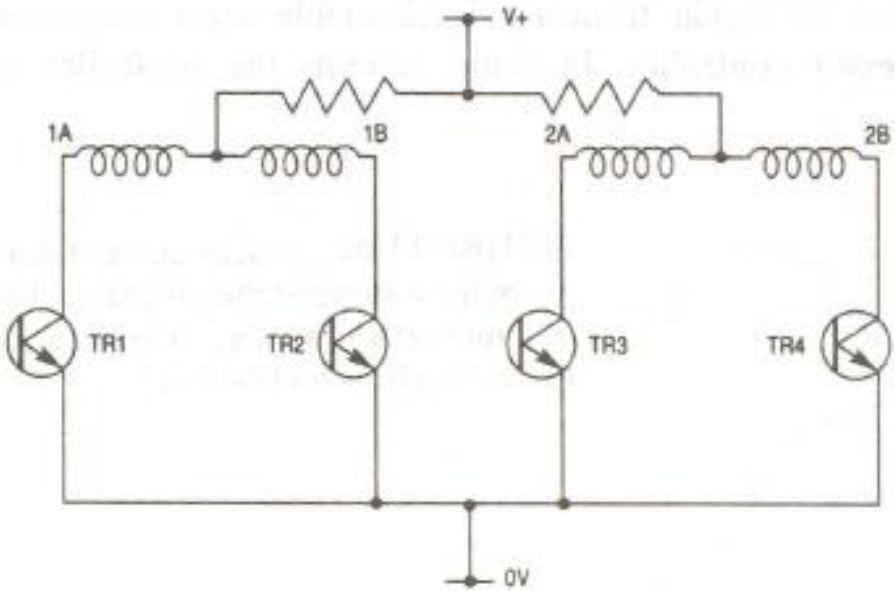

Unipolar motors

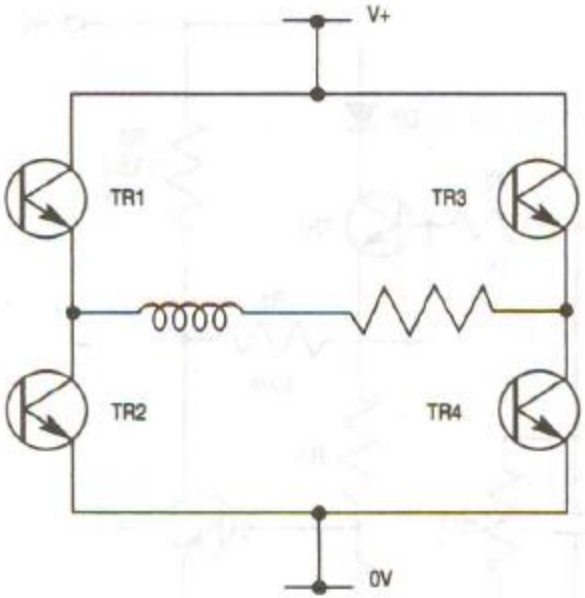

Bipolar motors

Stepper motor applications

Stepper motors are used in a wide variety of pplications in industry, including computer peripherals, business machines, motion control, and robotics, which are included in process control and machine tool applications.

Application	Use
Computer Peripherals	
Floppy Disc	position magnetic pickup
Printer	carriage drive
Printer	rotate character wheel
Printer	paper feed
Printer	ribbon wind/rewind
Printer	position matrix print head
Tape Reader	index tape
Plotter	X-Y-Z positioning
Plotter	paper feed

Stepper motor applications

Business Machines	
Card Reader	position cards
Copy Machine	paper feed
Banking Systems	credit card positioning
Banking Systems	paper feed
Typewriters (automatic)	head positioning
Typewriters (automatic)	paper feed
Copy Machine	lens positioning
Card Sorter	route card flow

Stepper motor applications

Process Control	
Carburetor Adjusting	air-fuel mixture adjust
Valve Control	fluid gas metering
Conveyor	main drive
In-Process Gaging	parts positioning
Assembly Lines	parts positioning
Silicon Processing	I. C. wafer slicing
I. C. Bonding	chip positioning
Laser Trimming	X-Y positioning
Liquid Gasket Dispensing	valve cover positioning
Mail Handling Systems	feeding and positioning letters

Stepper motor applications

Machine Tool	
Milling Machines	X-Y-Z table positioning
Drilling Machines	X-Y table positioning
Grinding Machines	downfeed grinding wheel
Grinding Machines	automatic wheel dressing
Electron Beam Welder	X-Y-Z positioning
Laser Cutting	X-Y-Z positioning
Lathes	X-Y positioning
Sewing	X-Y table positioning

Stepper Motor Selection

- Permanent Magnet / Variable Reluctance
- Unipolar vs. Bipolar
- Number of Stacks and Number of Phases
- Degrees Per Step i.e., Required step angle
- Full stepping / Half-stepping / Micro-stepping
- Pull-In/Pull-Out Torque
- Detent Torque
- Operating speed in steps/second
- Torque in oz-in.
- Load inertia in lb-in.2
- Time to accelerate in ms
- Time to decelerate in ms
- Type of drive to be used
- Size and weight considerations

Linear Stepper Motor

The linear stepper motor has been made fiat instead of round so its motion will be along a straight line instead of rotary.

***The platen is the fixed part of the motor* and its length will determine the distance the motor will travel. It has a number of teeth that are like the rotor in a traditional stepper motor except it is passive and is not a permanent magnet.**

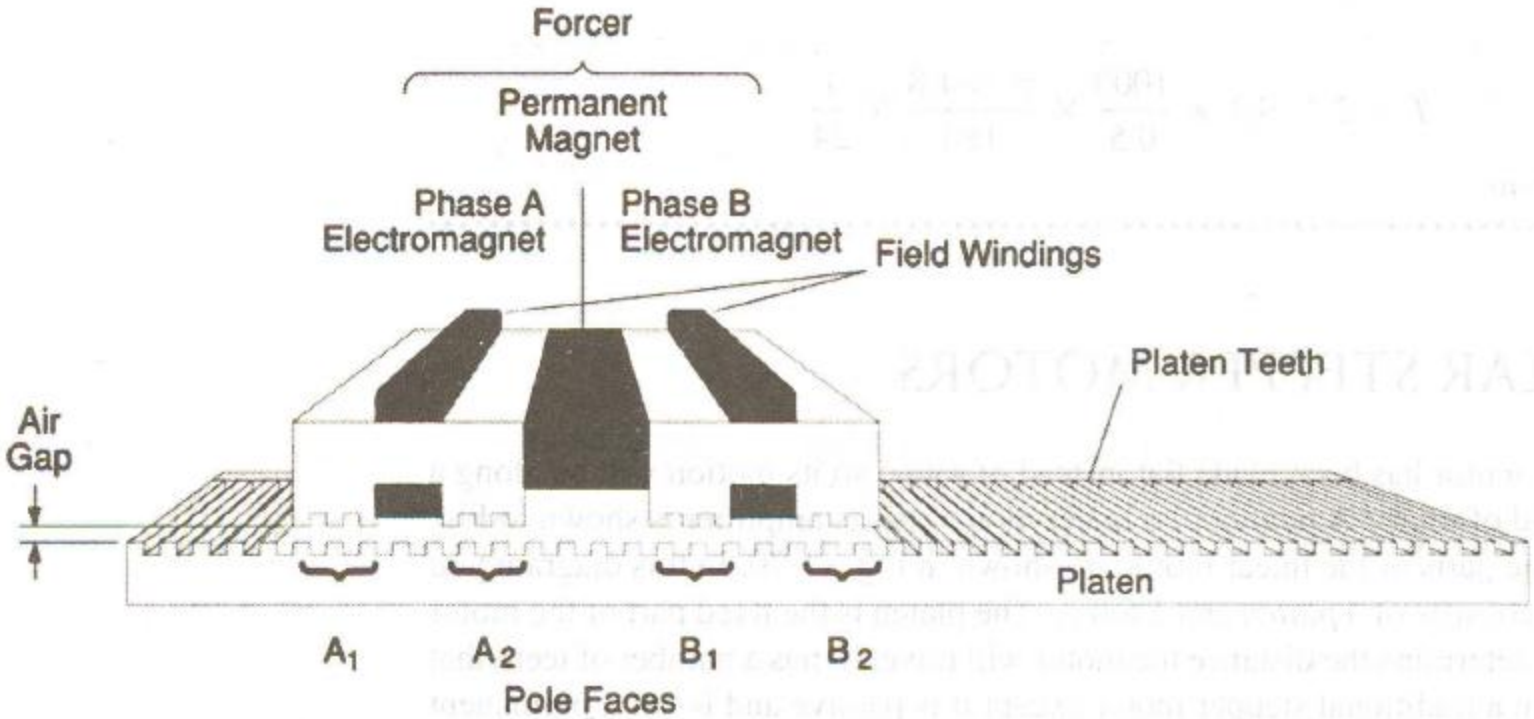

Linear Stepper Motor

The forcer consists of four pole pieces that each have three teeth. The pitch of each tooth is staggered with respect to the teeth of the platen. It uses mechanical roller bearings or air bearings to ride above the platen on an air gap so that the two never physically come into contact with each other. The magnetic field in the forcer is changed by passing current through its coils.

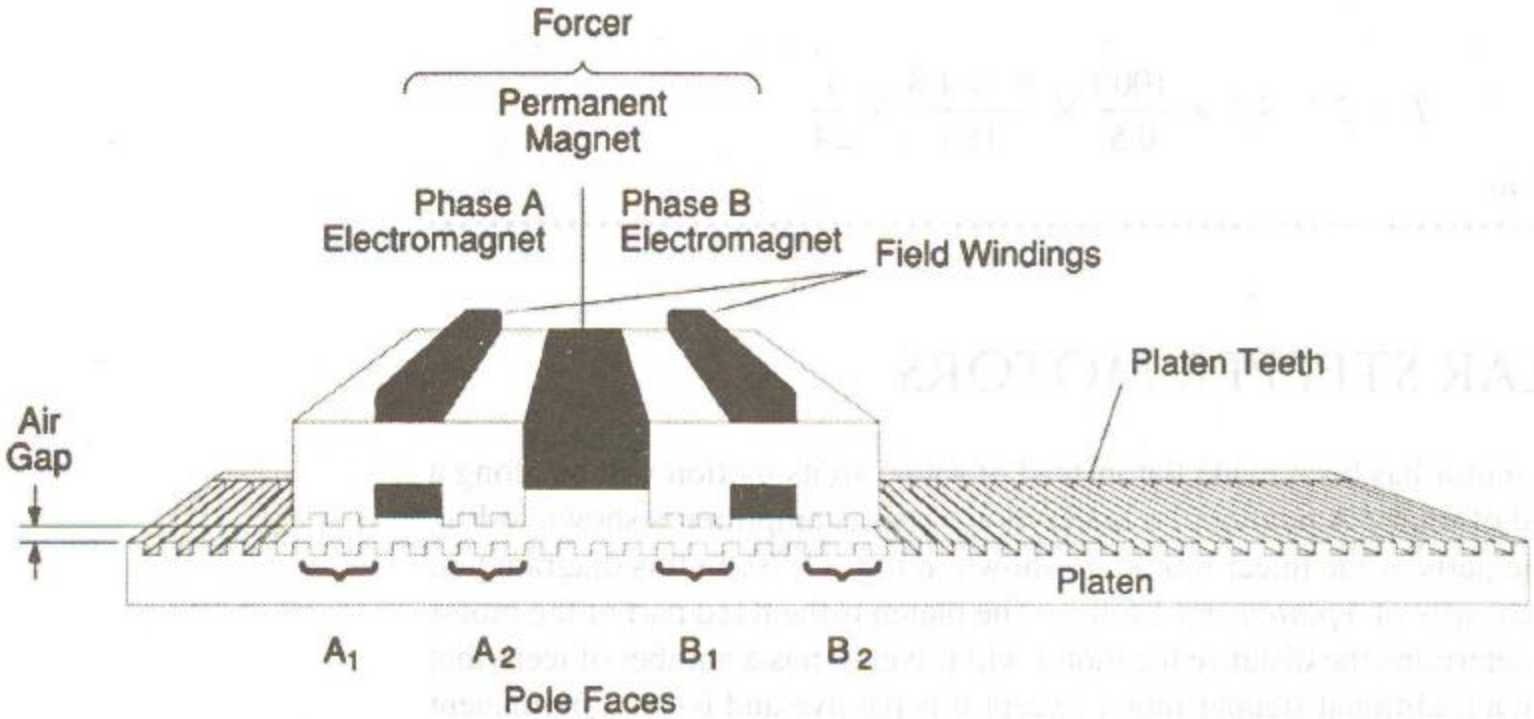

Linear Stepper Motor

This action causes the next set of teeth to align with the teeth on the platen and causes the forcer to move from tooth to tooth over the platen in linear travel.

When the current pattern is reversed, the forcer will reverse its direction of travel.

A complete switching cycle consists of four full steps, which moves the forcer the distance of one tooth pitch over the platen.

The typical resolution of a linear motor is 12,500 steps per inch, which provides a high degree of resolution. The typical load for a linear motor is low mass that requires high-speed movements.

Linear Stepper Motor Applications

Coil Winder

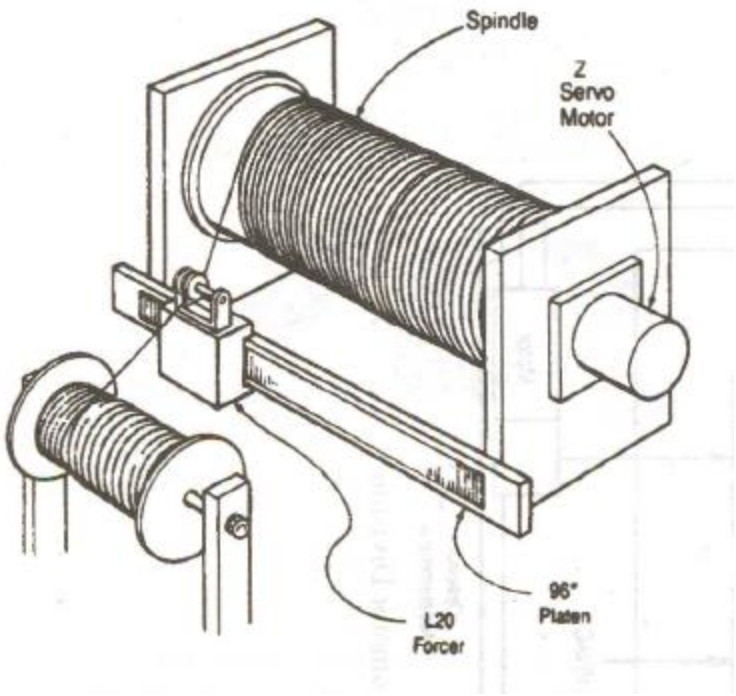

Semiconductor wafer transport

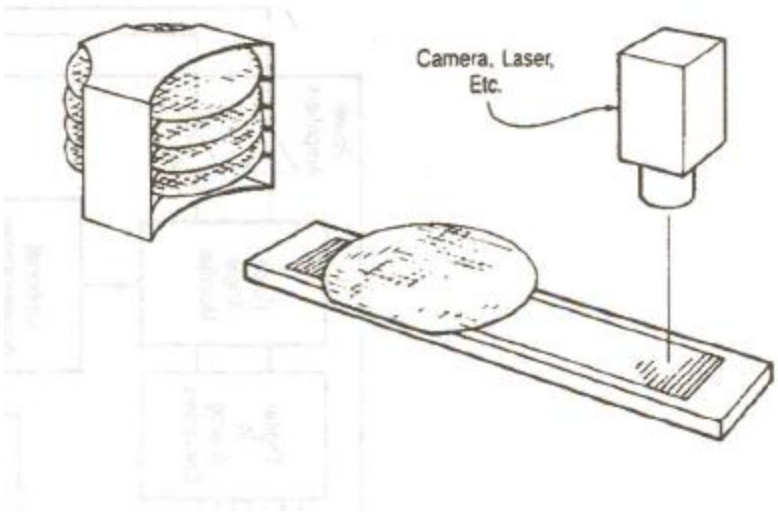

The applications for a linear motor tend to be straight-line motion.